IMPORTANT

Assembly & Safety Instructions for Aluminium Socketed Goals Code: 2711/80 Senior 24' x 8' 2711/80 Junior 21' x 7'

Goals shown with nets and continental net supports which are available separately

Conforms to
BS EN 748:2004 (senior)
BS 8462:2009 (youth)
when correctly assembled and anchored

Code of Practice BS8461:2005 includes, inspection, maintenance/care and storage of goalposts

All Edwards football goals are independently tested by an accredited testing house to British and European standards

Edwards is a suitable supplier to the Football Foundation Goalpost Safety Scheme

Component check list

Packer's initials

	Despatched	Received
2 X CROSSBARS (2711/80/CB) (2720/80/CB)		
4 X UPRIGHTS (2711/80/U) (2713/80/U)		
4 X SOCKETS (2712/80/1)		
20 X NUTS (NUT-M10-S-ZP)		
16 X BOLTS (BOL-M10-25-SQ-ZP)		
4 X BOLTS (BOL-M10-50-ZP)		
24 X WASHERS (WAS-M10-ZP)		
48 X NET HOOKS (HK-03/A)		
4 X PLATES (2711/BTPLT)		
4 X ELBOW JOINTS (STEEL-EJ-80)		

Unwrap each component part carefully to avoid any possibility of damaging the paintwork.
Please read carefully prior to assembly then store safely for future reference.

INSTALLATION INSTRUCTIONS FOR SOCKETED GOALS

- **DRAWINGS NOT TO SCALE**

Sockets must be concreted into the ground and be allowed to set firmly before erecting the goals, however to obtain the exact correct location for placing the sockets it may be helpful to assemble the goal (see stage 1 below) before starting excavation:

Sockets should always be set into an amount of 'RC30' concrete, required to support forces exerted on the goal of 1800 N (vertical) and 1100 N (horizontally) for one minute. This is indicated by FA safety standards and is regardless of ground conditions.

- Excavate holes of appropriate shape and size
- Insert sockets
- Clamp into vertical position with top of socket level with ground surface
- Concrete into position
- Leave to set

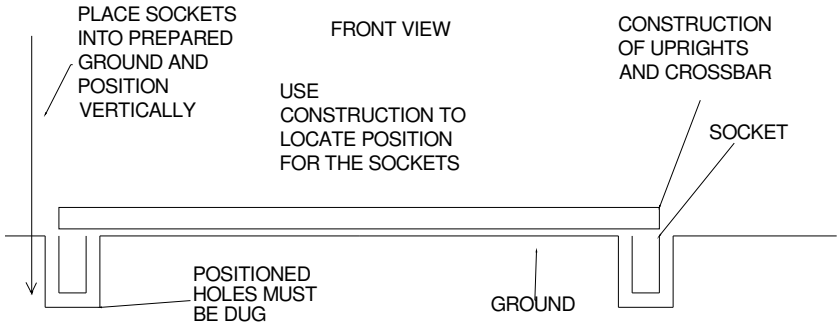

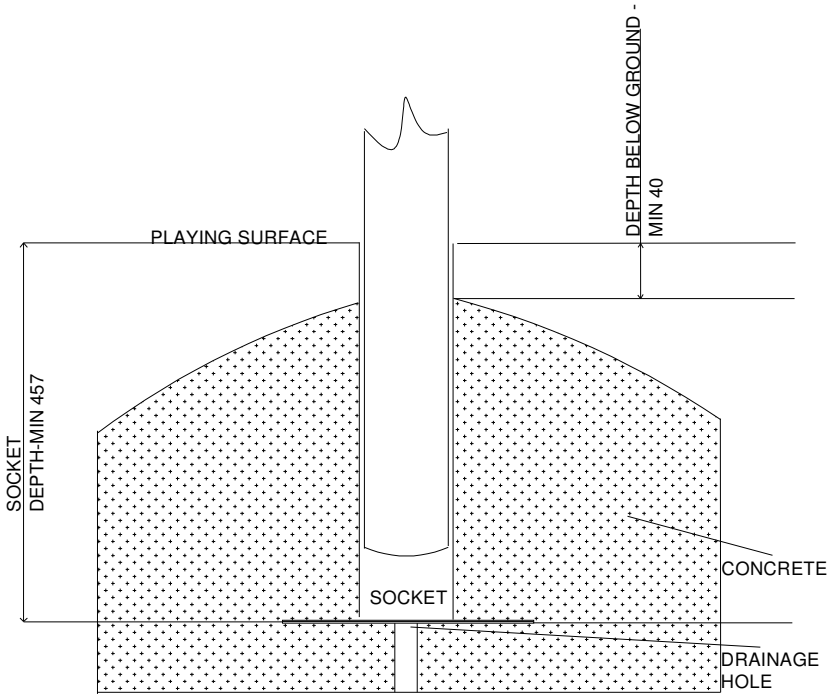

ALL DIMENSIONS IN MILLIMETRES

Raise posts into position with care and slot into secured sockets in ground.

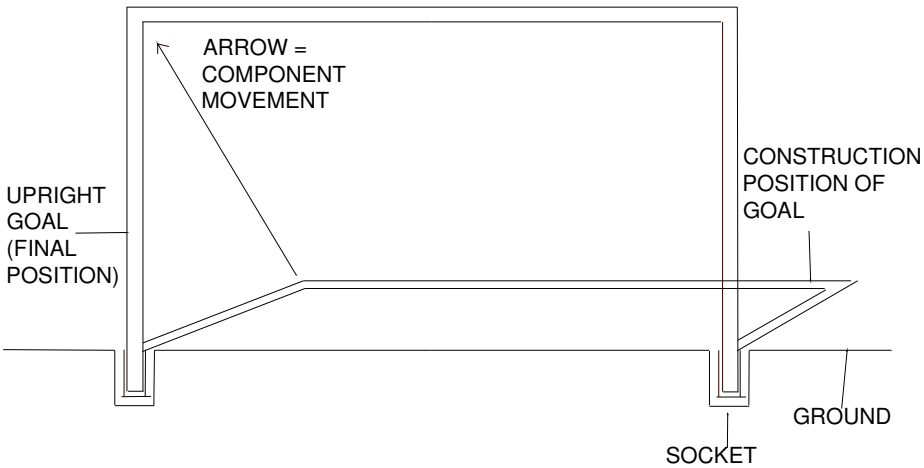

To obtain extra copies of socket installation instructions please visit our website:
www.edsports.co.uk

- **DRAWINGS NOT TO SCALE**

- **Stage 1** With the uprights and crossbar on ground insert bolts for net support attachment to **external** channels. To connect the crossbar and uprights, insert elbow joints into **internal** channels in crossbar, then push this construction into the uprights.

  Tighten all bolts ensuring no damage is caused to product paintwork.

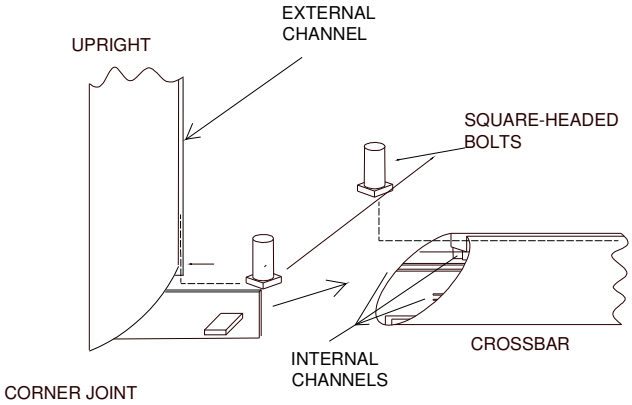

Note: If supplied with net supports, allow for 1 extra bolt in each upright and 2 extra bolts in crossbar (one at each end)

- **Stage 2** Before raising the posts, insert net clips into channel

  Raise posts into position with care and slot into secured sockets in ground.

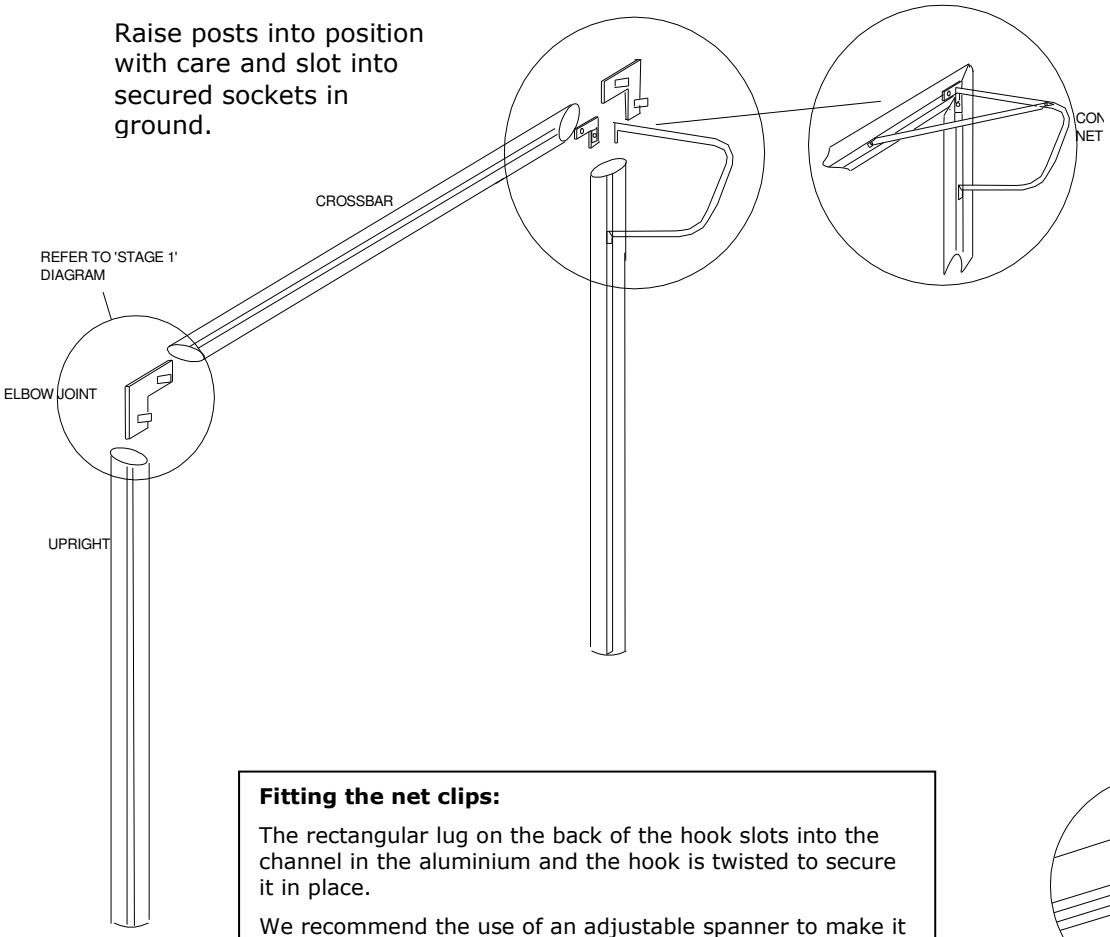

Fitting the net clips:

The rectangular lug on the back of the hook slots into the channel in the aluminium and the hook is twisted to secure it in place.

We recommend the use of an adjustable spanner to make it easier to twist.

Do not hit the hook to insert it into the channel as this risks serious damage to both the hook and the frame of the goal.

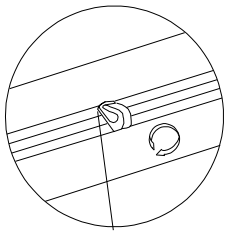

OPEN END OF CLIP FACING UPWARDS ON CROSSBAR AND OUTWARDS ON UPRIGHTS

Edwards Sports Products Ltd
North Mills
BRIDPORT
Dorset DT6 3BE

Tel: 01308 424 111
Fax: 01308 455 800
E-mail: sales@edsports.co.uk
Web: www.edsports.co.uk

To obtain extra copies of socket installation instructions please visit our website:
www.edsports.co.uk