IMPORTANT

Assembly & Safety Instructions for Steel Freestanding Goals Code: 2890 Senior 24' x 8' 2889 Junior 21' x 7'

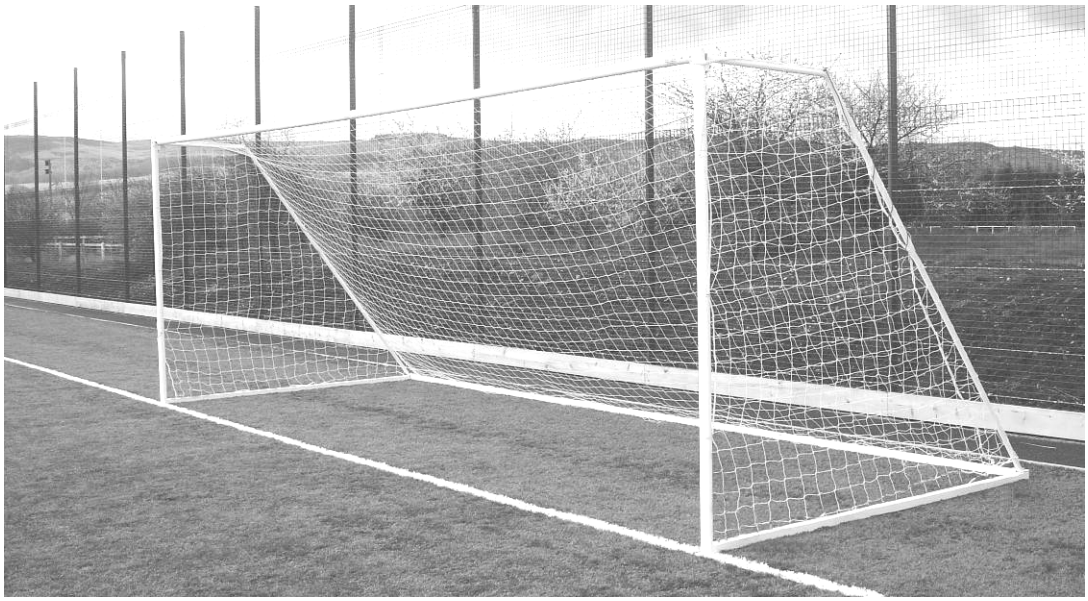

Goal shown with net - available separately

Conforms to
BS EN 748:2004 (senior)
BS 8462:2009 (youth)
when correctly assembled and anchored

Code of Practice BS8461:2005 includes, inspection, maintenance/care and storage of goalposts

All Edwards football goals are independently tested by an accredited testing house to British and European standards

Edwards is a suitable supplier to the Football Foundation Goalpost Safety Scheme

Component check list

Packer's initials

	Despatched	Received
2 x CROSSBARS (2760/CB) *(2762/CB)*		
4 x UPRIGHTS (2890/U) *(2889/U)*		
4 x RUNBACKS (2890/RB) *(2890/RB)*		
4 x BACKTUBES (2186/1) *(2889/BTJUNIOR)*		
2 x BACKBAR C/W PLATES (2890/BB) *(2889/BB)*		
20 x NUTS (NUT-M10-ZP)		
8 x BOLTS (BOL-M10-75-ZP)		
8 x BOLTS (BOL-M10-25-ZP)		
4 x BOLTS (BOL-M12-25-ZP)		
40 x NET HOOKS (HK-02/A)		
4 x L-BRACKET (L-BRKT)		
4 x NUTS (NUT-M12-ZP)		
4 x JOINING PLATE (2890/JU)		
4 X WASHERS (WAS-M10-ZP)		
4 X PLUGS (PLU-500-500)		

Unwrap each component part carefully to avoid any possibility of damaging the paintwork.
Please read carefully prior to assembly then store safely for future reference.

- **DRAWINGS NOT TO SCALE**

- **Stage 1** Lay uprights, crossbar and 'L' bracket on ground. Enclose upright end with crossbar (aligning holes). Align holes in 'L' bracket with those of crossbar/upright and slot its protrusion into upright slot.

  Using appropriate bolts, nuts and washers, secure structure through the three holes.

  Now raise into upright position.

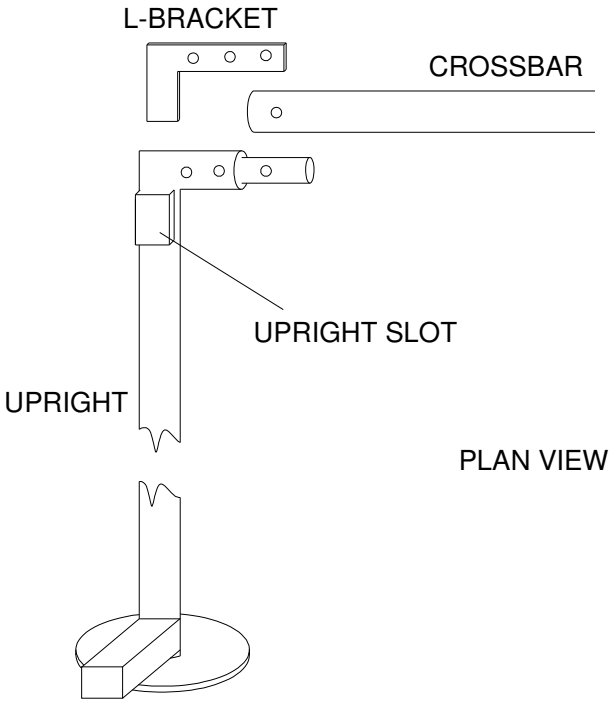

- **Stage 2** Secure runbacks to uprights using joining plate and nuts provided. (joining plate should be positioned inside the components with bolts).

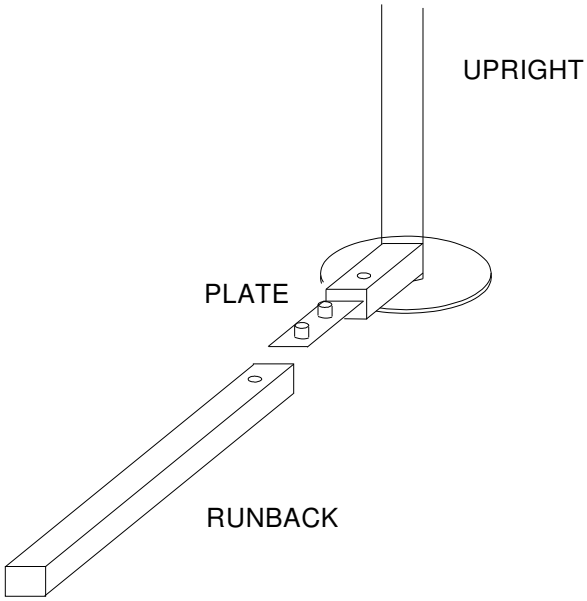

- **DRAWINGS NOT TO SCALE**

- **Stage 3** Drop the end of the net support protrusion into the 'u' shaped bracket on upright and secure with bolts provided. Connect the runbacks, bottom of net support and back-bars with the joining plates. Nuts and bolts and washers are provided.

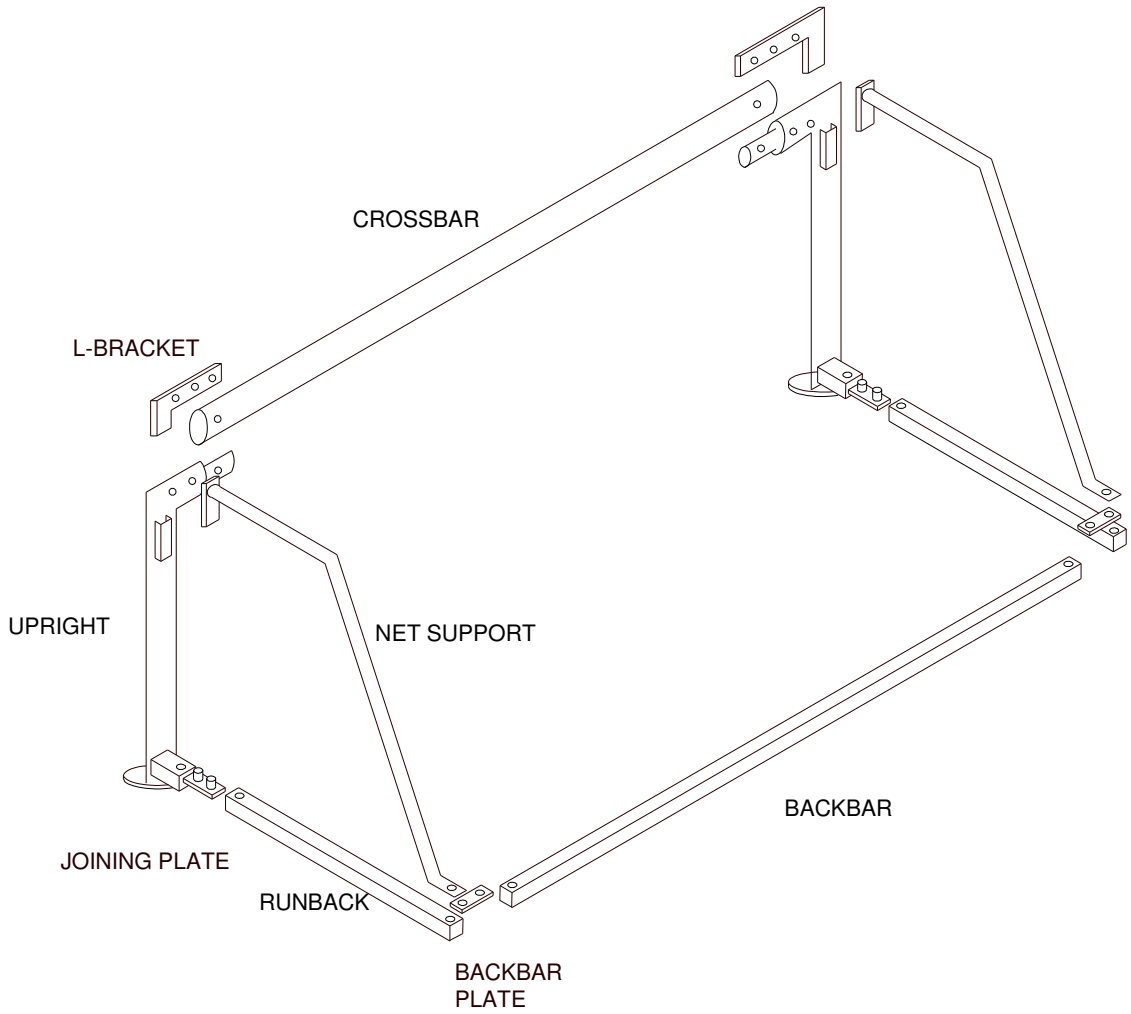

- **Stage 4** Before raising the posts, insert net clips into crossbar fit the split stem into the hole in the crossbar.

  TAP the centre rod gently all the way home.

  Ensure all hooks face the sideways position when assembling the crossbar.

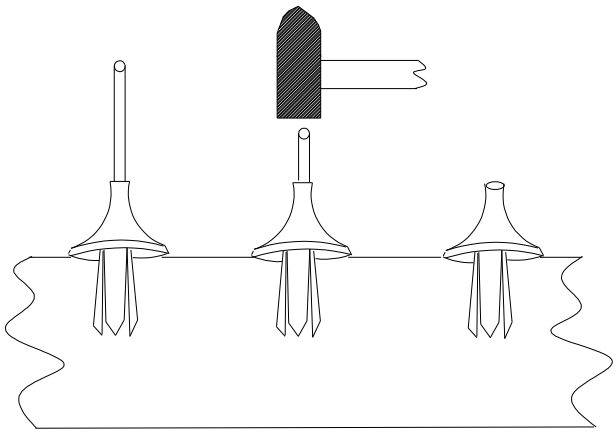

SETUP PROCEDURE FOR FLIPOVER WHEELS ON STEEL FREESTANDING FOOTBALL GOALS
CODE 2890/FLW & 2890/FLW/PP

- **DRAWINGS NOT TO SCALE**

- **Stage 1** Fit 'u' bracket under runback
- **Stage 2** Connect 'u' bracket and wheel arm with hex bolts and secure with nuts and washers provided (the hex bolts fit over the runback
- **Stage 3** Fit wheel to wheel arm and secure

Component check list

Packer's initials

	Despatched	Received
4 x 'U' BRACKET & ARMS (2890/FLW/F)		
4 X 'R' CLIP (PIN-20-R)		
4 X WHEEL (PNWH-260/20)		
4 X BOLT (BOL-M12-110-ZP)		
4 X BOLT (BOL-M12-120-ZP)		
12 X WASHERS (WAS-M12-28-ZP)		
8 X NUT (M12-S-ZP)		
8 X WASHER (WAS-M20-ZP)		

Unwrap each component part carefully to avoid any possibility of damaging the paintwork

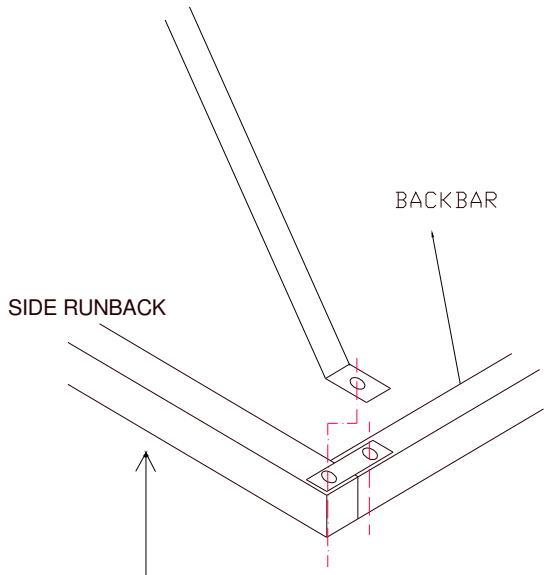

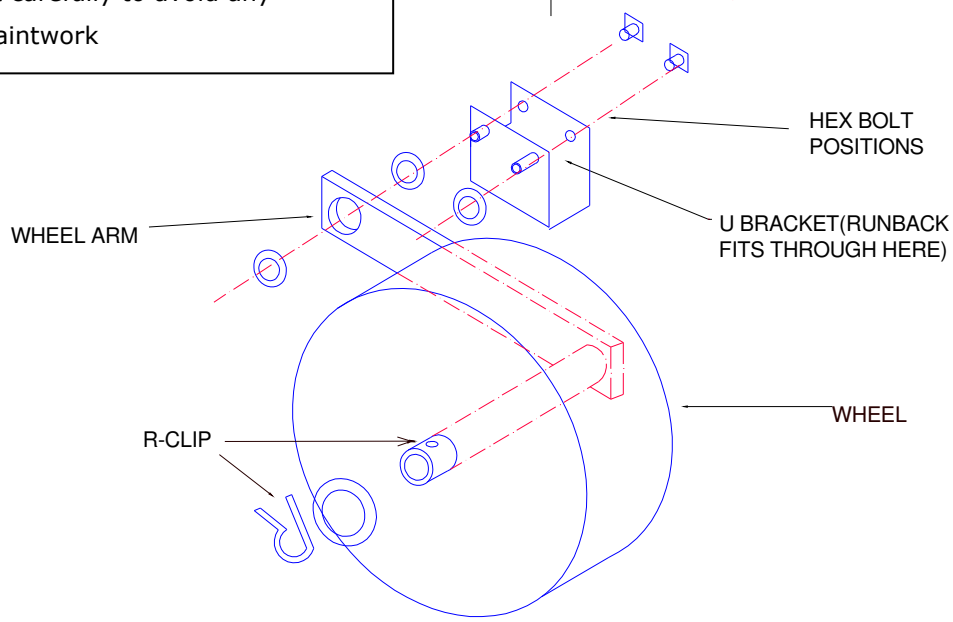

To prevent strain on joints, pneumatic flip-over wheels (2719/flw) are recommended if goals are to be moved regularly. Please contact our sales office for further details.

Edwards Sports Products Ltd
North Mills
BRIDPORT
Dorset DT6 3BE

Tel: 01308 424 111
Fax: 01308 455 800
E-mail: sales@edsports.co.uk
Web: www.edsports.co.uk